E.F. Deveney
BSC Physics: PH414 Experimental

Goal: To modify our existing general-purpose LabView program (used so far for the simple and not-so simple pendulum experiments) so that we can now use it to do a Fourier Series analysis and our Fourier lab.

OK: so start with our general purpose DAQ (data acquisition LabView program for the pendulum labs) shown below.

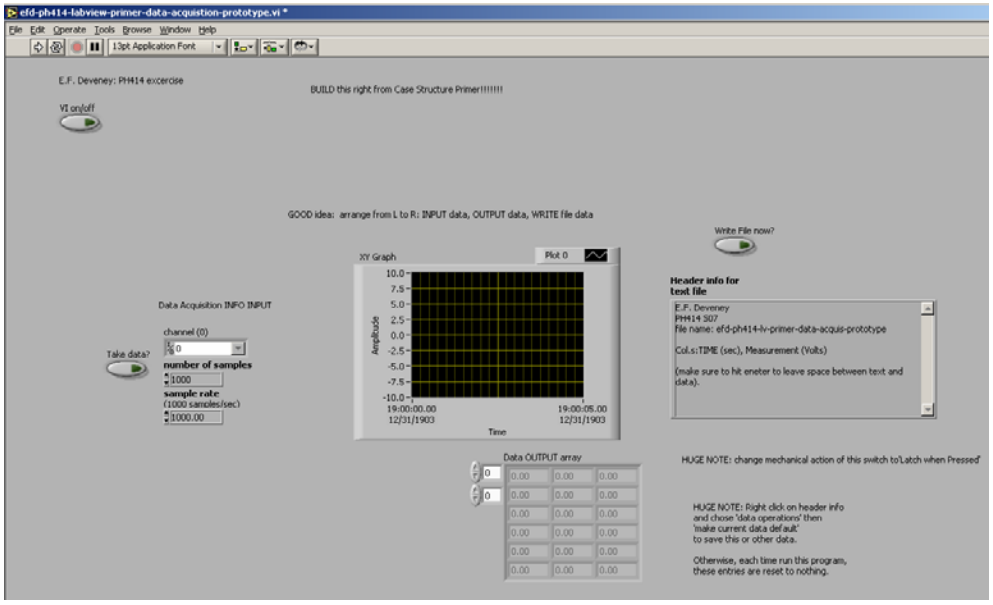

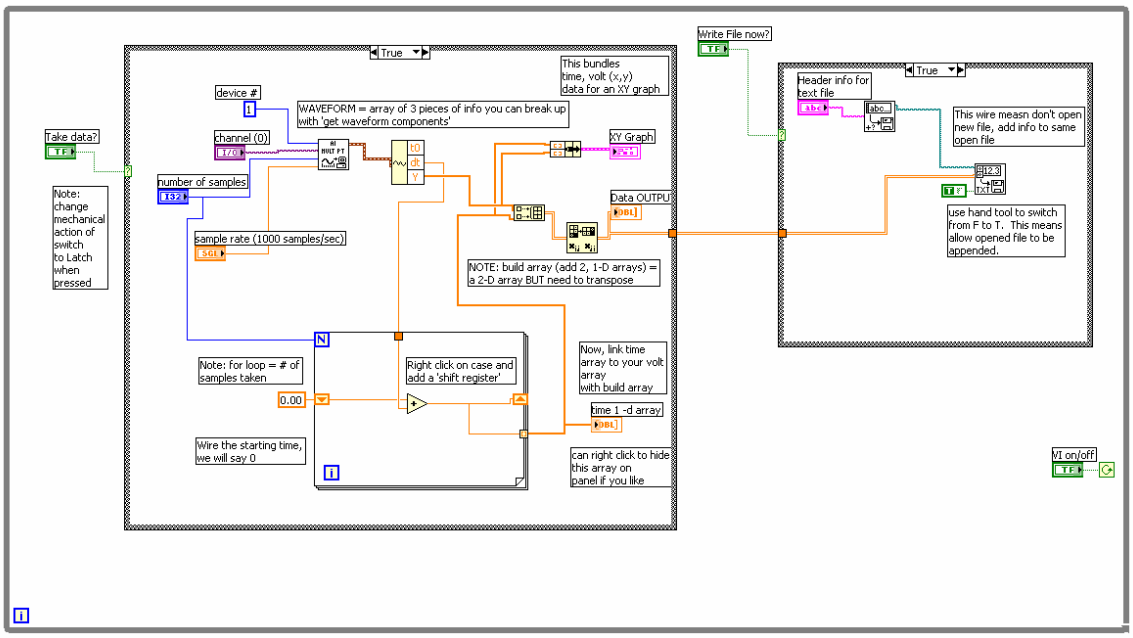

Recalling how this works, we take data in the form of 'waveforms' (brown thick line in LV). We want to plot the 'y' values versus time. Waveform does this but not so conveniently so we extract just the 'y' values using the 'extract waveform components' and then we build the time values with the for loop tied to the number of samples taken and the dt (time between each sample) also taken form the waveform. Then we build an 'array' of the y vs. time data. This is easiest form of the data to save and analyze.

OK, the only modifications for the Fourier lab will be to have LabView take the Fourier series expansion of the data and create a frequency domain representation of the time domain data (ie f(t) to f(1/t)). We will want to plot out the frequency domain representation and then get the data in a nice easy form to export into the text file, amplitude versus frequency.

Fourier series and plotting the frequency domain:

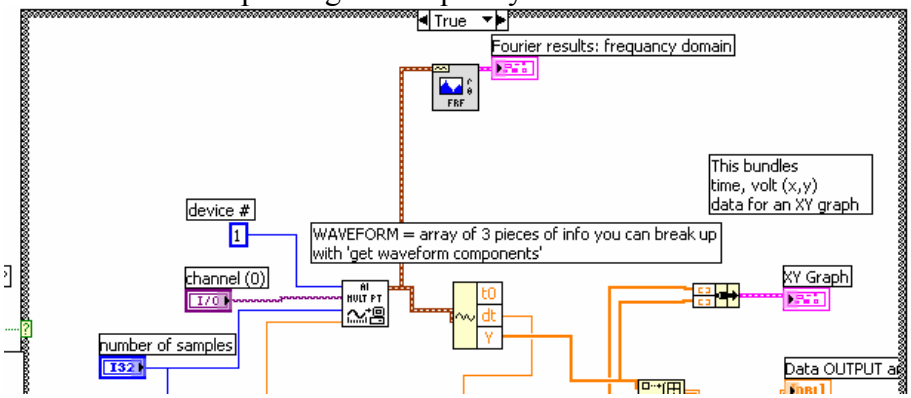

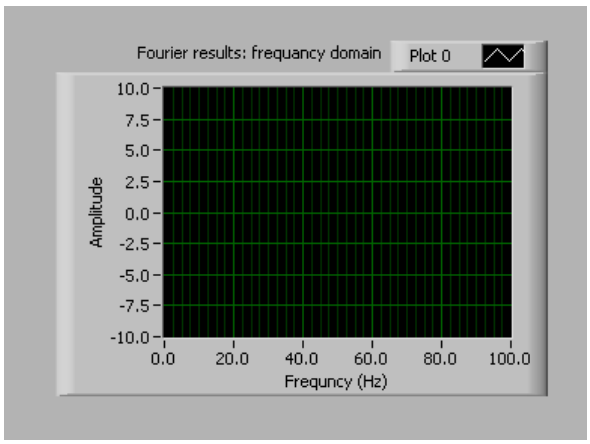

NOTE: changed this to wave plot and put in new axis label for frequency. NOTE: use the FFT LabView vi not the one shown above (see below).

Next, I will extract the amplitudes from the Fourier results. LabView bundles the results into a new data group called a cluster (note the pink thick wire). So, you need to 'uncluster' the data to get at the amplitudes.

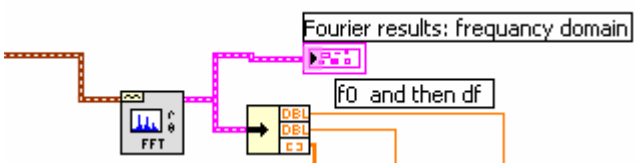

The bottom component is a single array of the amplitudes only. Ok, the other two outputs are f0 and df, so just like the waveform data, we can build the frequency space starting at f0 and stepping up by df using the for loop again (NOTE – the LV Fourier is the FFT one as shown above, not below).

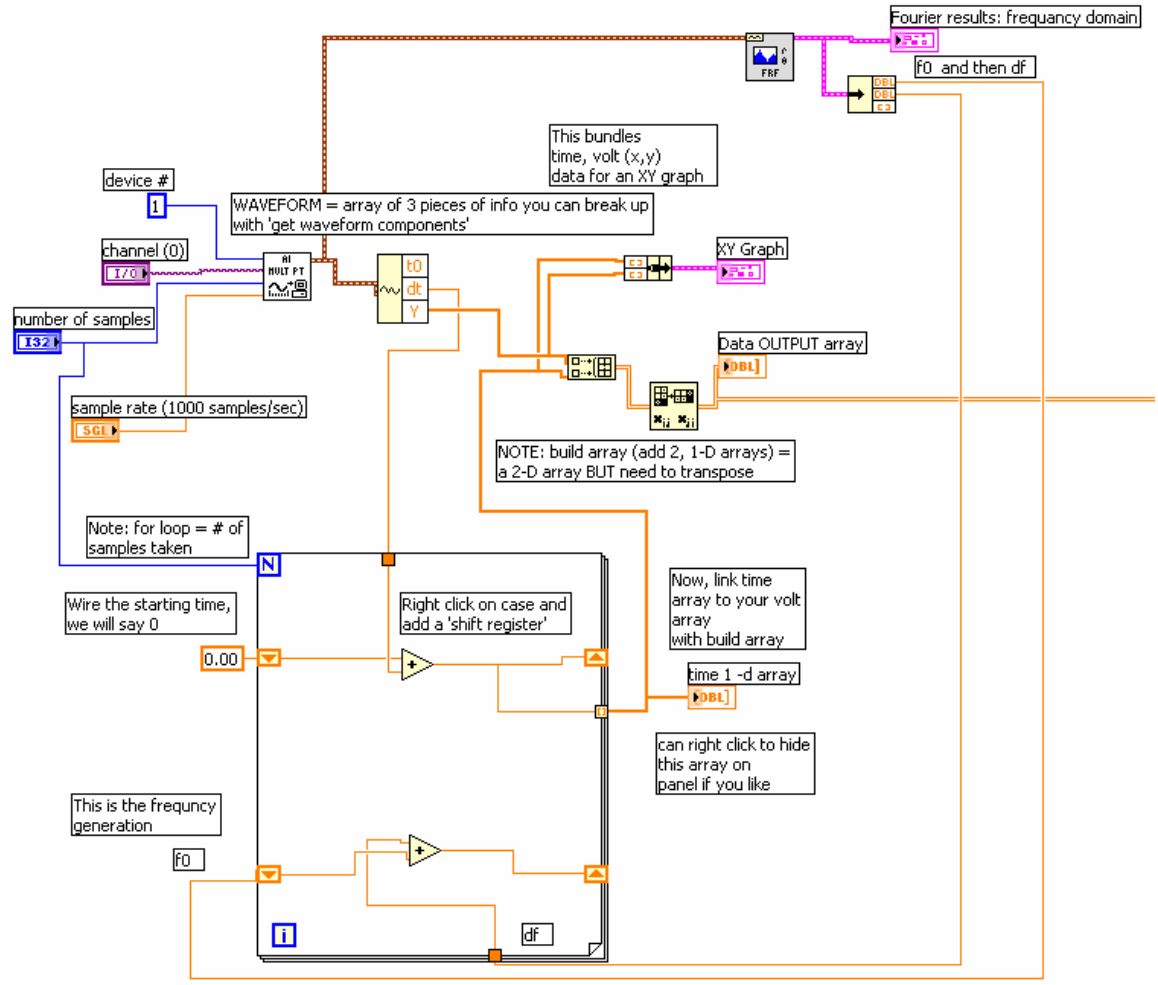

All I have done, is added another shift register to the for loop, and then connected the f0 and df to it. Remember to add a wire that connects the shift register to the edge of the For loop (next page, forget it above) so that each bit of data is stored at the edge and then forms a 1-D array of all of the values. The output is now the frequency information from the Fourier analysis.

Next, I'll want to add amplitude vs frequency to the array that already has signal (y) versus time so that all of the data will be together and can be written to the file. You'll need to stretch the build array so that it can incorporate two more 1-D arrays:

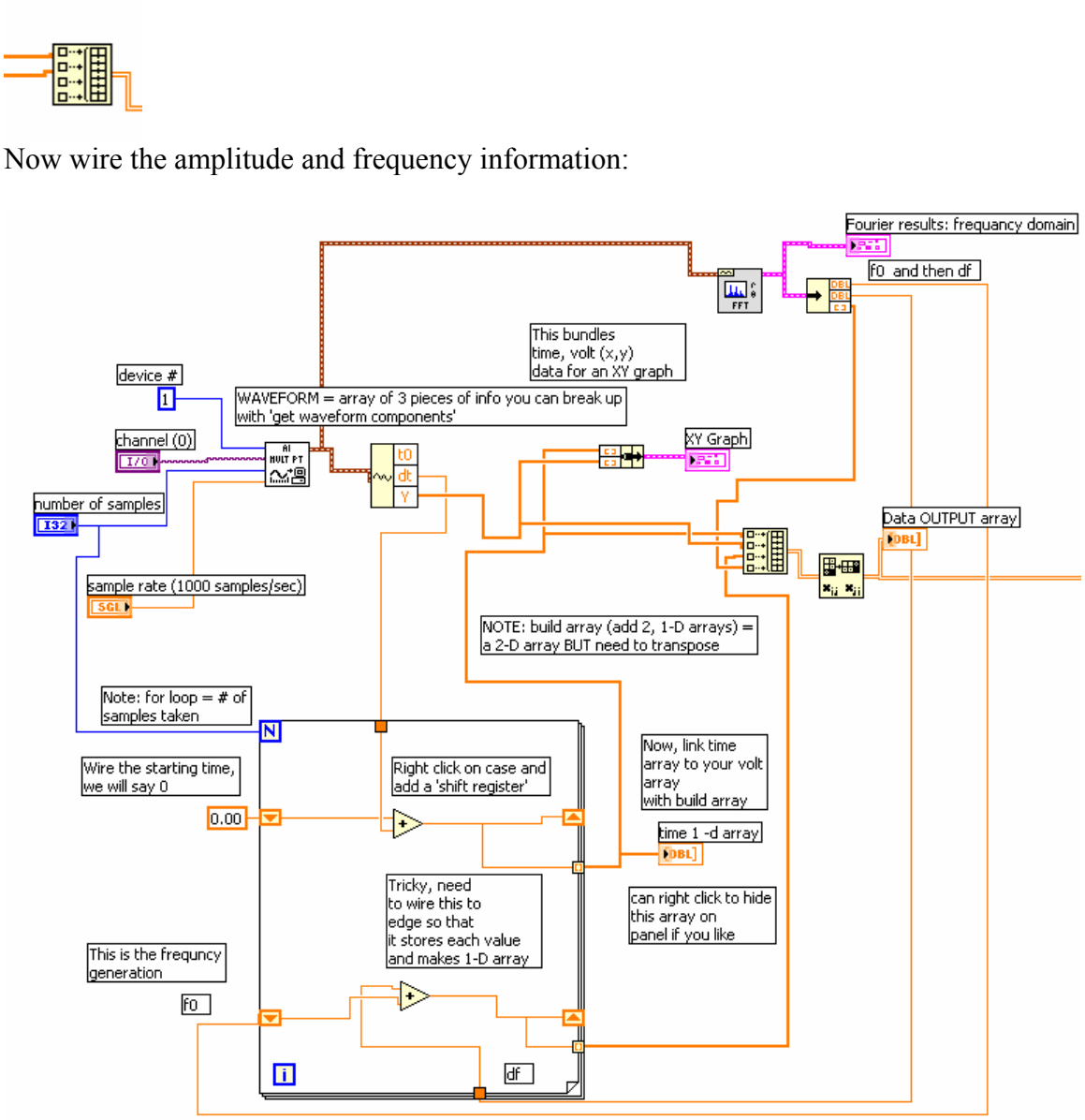

NOTES!!!!
I ended up reversing the order of V(t) and t, and Amp, Hz into the build array to get is columns more suited for EXCEL.

Ok, a bit messy but this should output a file:

Header info:
f(t), t, amp(Hz), freq (Hz).

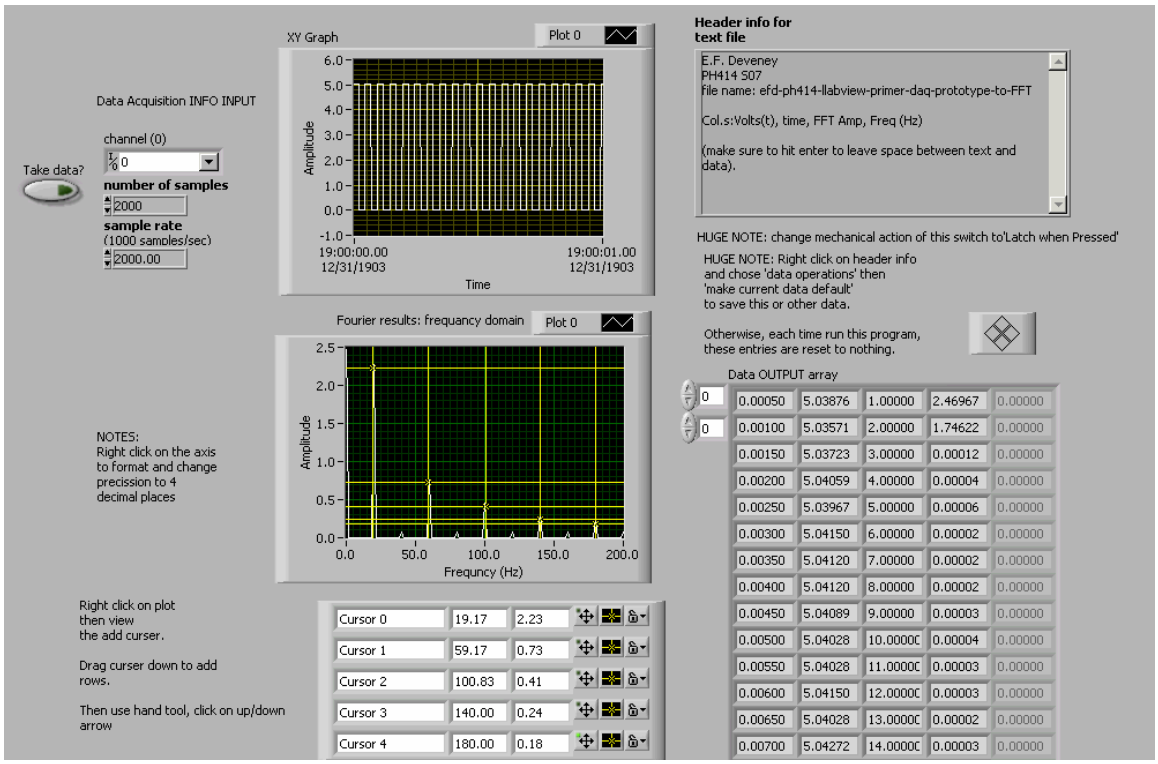
XY Graph
Plot 0
Amplitude
Time
19:00:00.00
12/31/1903
19:00:01.00
12/31/1903
Data Acquisition INFO INPUT
channel (0)
Take data?
number of samples
2000
sample rate
(1000 samples/sec)
2000.00
Header info for text file
E.F. Deveney
PH414 S07
file name: efd-ph414-llabview-primer-daq-prototype-to-FFT
Col.s:Volts(t), time, FFT Amp, Freq (Hz)
(make sure to hit enter to leave space between text and data).
HUGE NOTE: change mechanical action of this switch to'Latch when Pressed'
HUGE NOTE: Right click on header info and chose 'data operations' then 'make current data default' to save this or other data.
Otherwise, each time run this program, these entries are reset to nothing.
Fourier results: frequancy domain
Plot 0
Frequncy (Hz)
NOTES:
Right click on the axis to format and change precission to 4 decimal places
Data OUTPUT array
Right click on plot then view the add curser.
Drag curser down to add rows.
Then use hand tool, click on up/down arrow
Cursor 0 19.17 2.23
Cursor 1 59.17 0.73
Cursor 2 100.83 0.41
Cursor 3 140.00 0.24
Cursor 4 180.00 0.18

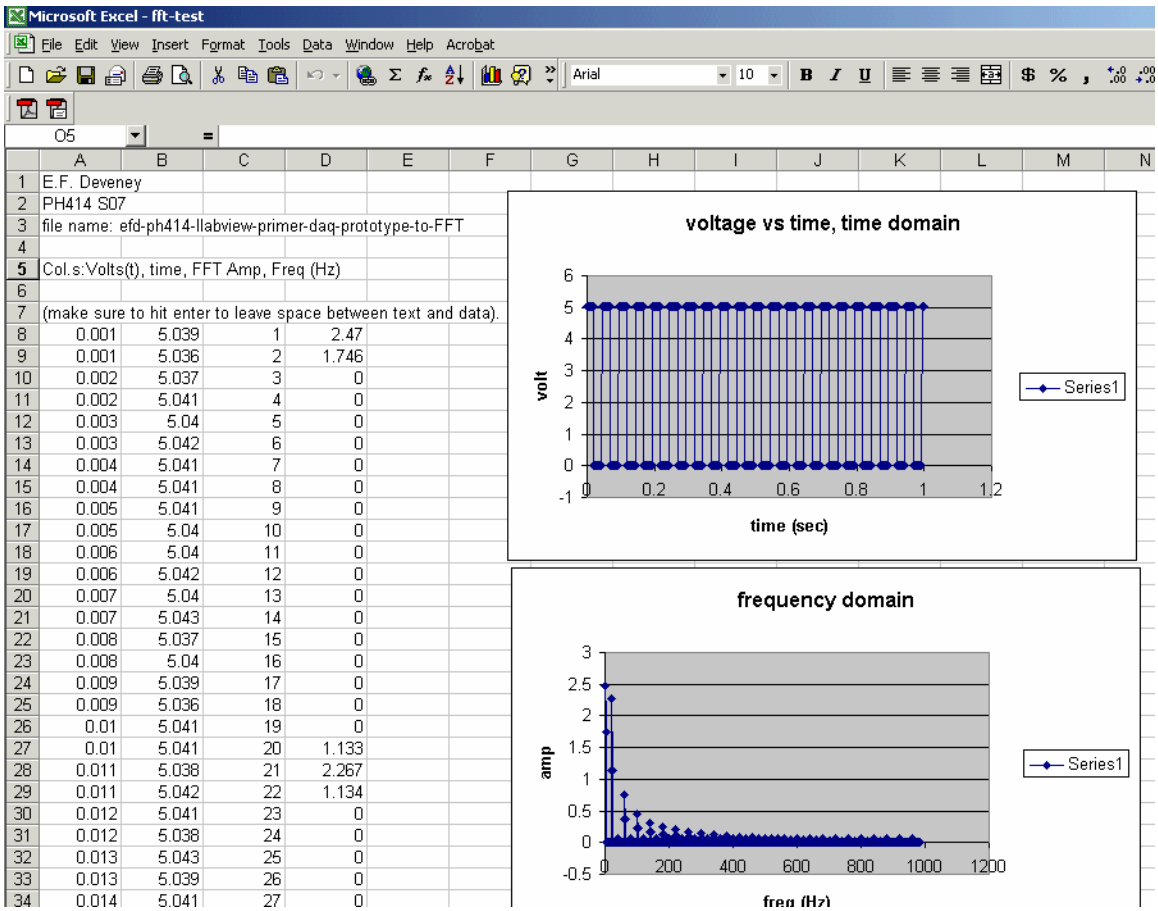
Microsoft Excel - fft-test
File Edit View Insert Format Tools Data Window Help Acrobat
Arial 10
O5
E.F. Deveney
PH414 S07
file name: efd-ph414-llabview-primer-daq-prototype-to-FFT
Col.s:Volts(t), time, FFT Amp, Freq (Hz)
(make sure to hit enter to leave space between text and data).
voltage vs time, time domain
volt
time (sec)
Series1
frequency domain
amp
freq (Hz)
Series1